Detailing with Pro/ENGINEER Wildfire 4.0

Overview

Course Code	TRN-2173–T
Course Length	3 Days

Detailing with Pro/ENGINEER Wildfire 4.0 is a comprehensive training course that teaches you how to quickly create detailed drawings using information captured within 3-D design models. In this course, you learn how to create drawings, how to detail drawings, and how to take advantage of the parametric and associative nature of Pro/ENGINEER Wildfire 4.0 when configuring drawings. After completing this course, you will be able to create production drawings suitable for manufacturing.

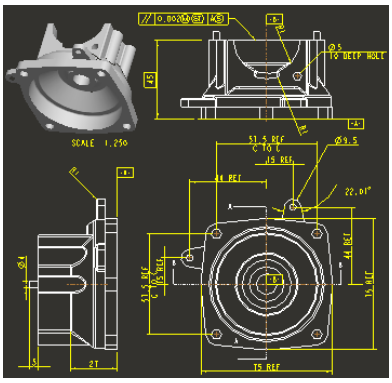

Course Objectives

- Understand the drawing development process.
- Create new drawings using formats and drawing templates.
- Create different types of views in drawings.
- Create dimensions and notes.
- Control display options using layers.
- Apply dimensional and geometric tolerances in drawings.
- Add draft geometry and symbols to drawings.
- Use layers in drawings to control the display of views and detail items.
- Create drawing tables and a bill of materials.
- Create drawing formats.
- Configure the drawing environment.
- Manage large drawings.

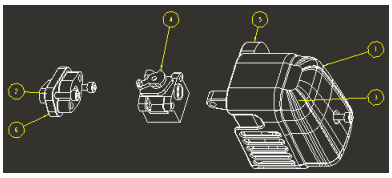

Prerequisites

- Introduction to Pro/ENGINEER Wildfire 4.0.

Audience

- This course is intended for mechanical designers, design engineers, and related roles.

Agenda

Day 1

Module	1	Introduction to Drawings
Module	2	Creating New Drawings
Module	3	Creating Drawing Views

Day 2

Module	4	Adding Model Details to Drawings
Module	5	Adding Notes to Drawings
Module	6	Adding Tolerance Information
Module	7	Adding Draft Geometry and Symbols

Day 3

Module	8	Using Layers in Drawings
Module	9	Creating and Using Tables in Drawings
Module	10	Using Report Information in Drawings
Module	11	Creating Drawing Formats
Module	12	Configuring the Drawing Environment
Module	13	Managing Large Drawings